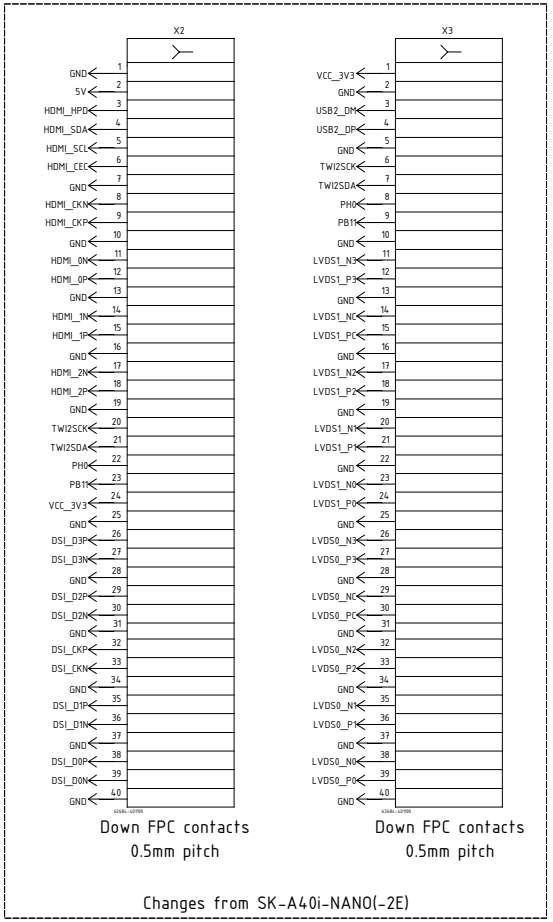

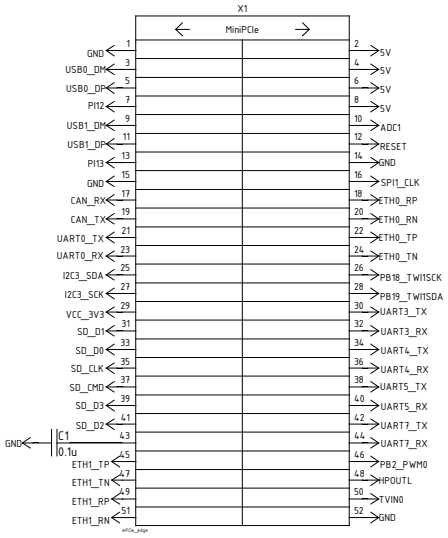

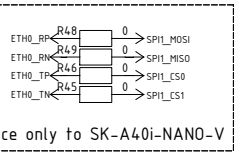

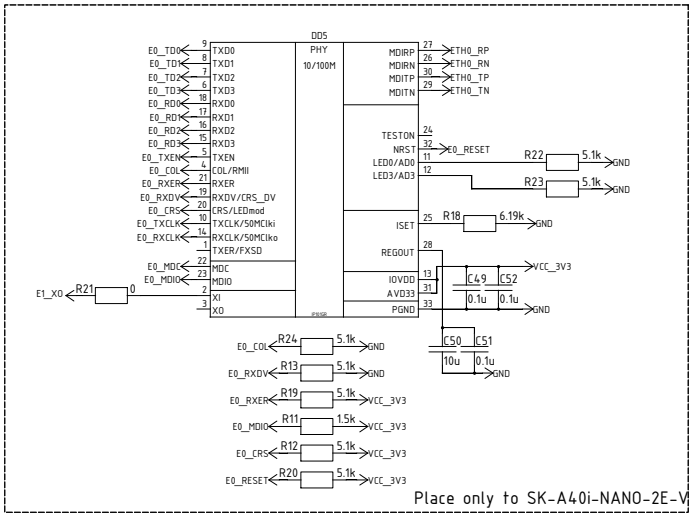

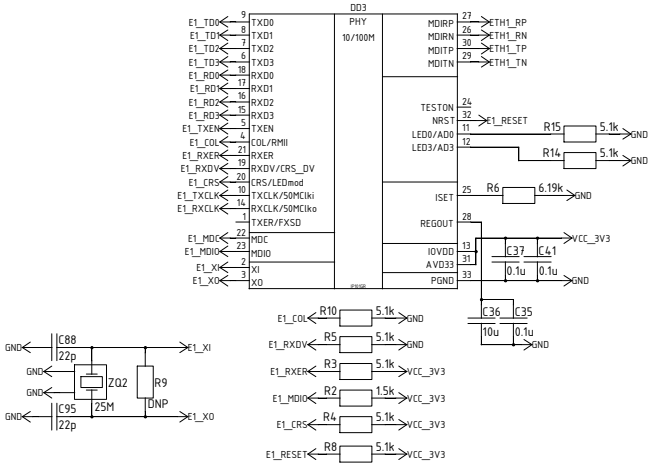

SK-A40i-NANO(-2E)-V	
V1.A	
www.starterkit.ru	
www.out4.ru	

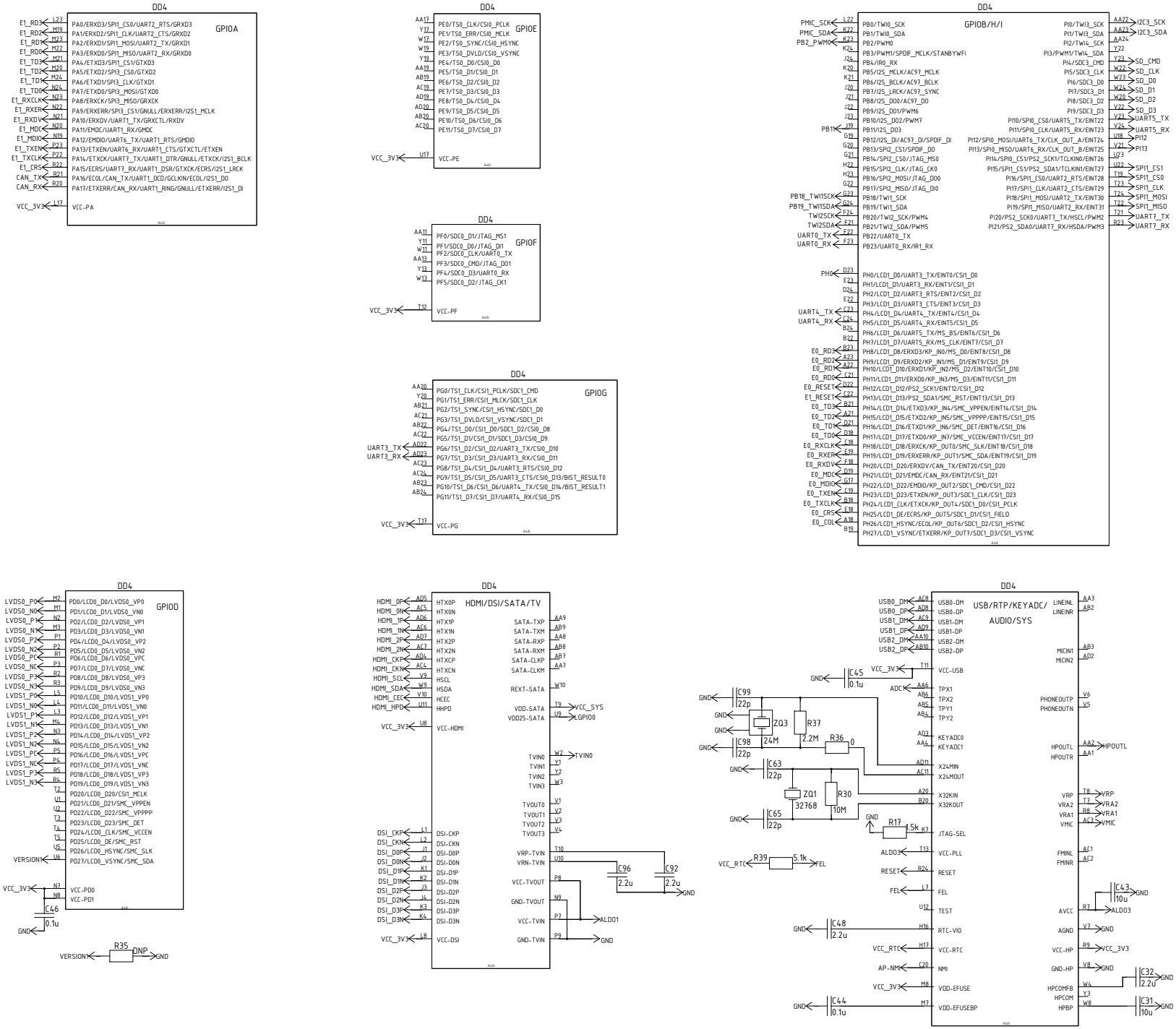
DD4
GPIOA
PA0/ERXD3/SPI1_CS0/UART2_RTS/GRXD3
PA1/ERXD2/SPI1_CLK/UART2_CTS/GRXD2
PA2/ERXD1/SPI1_MOSI/UART2_TX/GRXD1
PA3/ERXD0/SPI1_MISO/UART2_RX/GRXD0
PA4/ETXD3/SPI1_CS1/GTXD3
PA5/ETXD2/SPI3_CS0/GTXD2
PA6/ETXD1/SPI3_CLK/GTXD1
PA7/ETXD0/SPI3_MOSI/GTXD0
PA8/ERXCK/SPI3_MISO/GRXCK
PA9/ERXERR/SPI3_CS1/GNULL/ERXERR/I2S1_MCLK
PA10/ERXDV/UART1_TX/GRXCTL/RXDV
PA11/EMDC/UART1_RX/GMDC
PA12/EMDIO/UART6_TX/UART1_RTS/GMDIO
PA13/ETXEN/UART6_RX/UART1_CTS/GTXCTL/ETXEN
PA14/ETXCK/UART7_TX/UART1_DTR/GNULL/ETXCK/I2S1_BCLK
PA15/ECRS/UART7_RX/UART1_DSR/GTXCK/ECRS/I2S1_LRCK
PA16/ECOL/CAN_TX/UART1_DCD/GCLKIN/ECOL/I2S1_DO
PA17/ETXERR/CAN_RX/UART1_RING/GNULL/ETXERR/I2S1_DI
VCC-PA
E1_RD3 L23
E1_RD2 M19
E1_RD1 M23
E1_RD0 M22
E1_TD3 M21
E1_TD2 M20
E1_TD1 M24
E1_TD0 N24
E1_RXCLK N23
E1_RXER N22
E1_RXDV N21
E1_MDC N20
E1_MDIO N19
E1_TXEN P23
E1_TXCLK P22
E1_CRS R22
CAN_TX R21
CAN_RX R20
VCC_3V3 L17
DD4
GPIOE
PE0/TS0_CLK/CSI0_PCLK AA17
PE1/TS0_ERR/CSI0_MCLK Y17
PE2/TS0_SYNC/CSI0_HSYNC W17
PE3/TS0_DVLD/CSI0_VSYNC W19
PE4/TS0_D0/CSI0_D0 Y19
PE5/TS0_D1/CSI0_D1 AA19
PE6/TS0_D2/CSI0_D2 AB19
PE7/TS0_D3/CSI0_D3 AC19
PE8/TS0_D4/CSI0_D4 AD19
PE9/TS0_D5/CSI0_D5 AD20
PE10/TS0_D6/CSI0_D6 AB20
PE11/TS0_D7/CSI0_D7 AC20
VCC-PE
VCC_3V3 U17
DD4
GPIOF
PF0/SDC0_D1/JTAG_MS1 AA11
PF1/SDC0_D0/JTAG_DI1 Y11
PF2/SDC0_CLK/UART0_TX W11
PF3/SDC0_CMD/JTAG_DO1 AA13
PF4/SDC0_D3/UART0_RX Y13
PF5/SDC0_D2/JTAG_CK1 W13
VCC-PF
VCC_3V3 T12
DD4
GPIOG
PG0/TS1_CLK/CSI1_PCLK/SDC1_CMD AA20
PG1/TS1_ERR/CSI1_MLCK/SDC1_CLK Y20
PG2/TS1_SYNC/CSI1_HSYNC/SDC1_D0 AB21
PG3/TS1_DVLD/CSI1_VSYNC/SDC1_D1 AC21
PG4/TS1_D0/CSI1_D0/SDC1_D2/CSI0_D8 AB22
PG5/TS1_D1/CSI1_D1/SDC1_D3/CSI0_D9 AC22
PG6/TS1_D2/CSI1_D2/UART3_TX/CSI0_D10 AD22
PG7/TS1_D3/CSI1_D3/UART3_RX/CSI0_D11 AD23
PG8/TS1_D4/CSI1_D4/UART3_RTS/CSI0_D12 AC23
PG9/TS1_D5/CSI1_D5/UART3_CTS/CSI0_D13/BIST_RESULT0 AC24
PG10/TS1_D6/CSI1_D6/UART4_TX/CSI0_D14/BIST_RESULT1 AB23
PG11/TS1_D7/CSI1_D7/UART4_RX/CSI0_D15 AB24
UART3_TX
UART3_RX
VCC-PG
VCC_3V3 T17
DD4
GPIOB/H/I
PB0/TWI0_SCK PMIC_SCK L22
PB1/TWI0_SDA PMIC_SDA K22
PB2/PWM0 PB2_PWM0 K23
PB3/PWM1/SPDIF_MCLK/STANBYWFI K24
PB4/IR0_RX J24
PB5/I2S_MCLK/AC97_MCLK K20
PB6/I2S_BCLK/AC97_BCLK K21
PB7/I2S_LRCK/AC97_SYNC J20
PB8/I2S_DO0/AC97_DO J21
PB9/I2S_DO1/PWM6 J22
PB10/I2S_DO2/PWM7 J23
PB11/I2S_DO3 PB11 J19
PB12/I2S_DI/AC97_DI/SPDIF_DI G19
PB13/SPI2_CS1/SPDIF_DO G20
PB14/SPI2_CSO/JTAG_MSO G21
PB15/SPI2_CLK/JTAG_CKO H22
PB16/SPI2_MOSI/JTAG_DOO H23
PB17/SPI2_MISO/JTAG_DIO G22
PB18/TWI1SCK PB18_TWI1SCK G23
PB19/TWI1SDA PB19_TWI1SDA G24
PB20/TWI2_SCK/PWM4 TWI2SCK F24
PB21/TWI2_SDA/PWM5 TWI2SDA F21
PB22/UART0_TX UART0_TX F22
PB23/UART0_RX/IR1_RX UART0_RX F23
PI0/TWI3_SCK AA22 I2C3_SCK
PI1/TWI3_SDA AA23 I2C3_SDA
PI2/TWI4_SCK AA24
PI3/PWM1/TWI4_SDA Y22
PI4/SDC3_CMD Y23 SD_CMD
PI5/SDC3_CLK W22 SD_CLK
PI6/SDC3_D0 W23 SD_D0
PI7/SDC3_D1 W24 SD_D1
PI8/SDC3_D2 W20 SD_D2
PI9/SDC3_D3 V22 SD_D3
PI10/SPI0_CS0/UART5_TX/EINT22 V23 UART5_TX
PI11/SPI0_CLK/UART5_RX/EINT23 V24 UART5_RX
PI12/SPI0_MOSI/UART6_TX/CLK_OUT_A/EINT24 U18 PI12
PI13/SPI0_MSO/UART6_RX/CLK_OUT_B/EINT25 V21 PI13
PI14/SPI0_CS1/PS2_SCK1/TCLKIN0/EINT26 U23
PI15/SPI1_CS1/PS2_SDA1/TCLKIN1/EINT27 U22 SPI1_CS1
PI16/SPI1_CS0/UART2_RTS/EINT28 T19 SPI1_CS0
PI17/SPI1_CLK/UART2_CTS/EINT29 T23 SPI1_CLK
PI18/SPI1_MOSI/UART2_TX/EINT30 T24 SPI1_MOSI
PI19/SPI1_MISO/UART2_RX/EINT31 T22 SPI1_MISO
PI20/PS2_SCK0/UART7_TX/HSCL/PWM2 T21 UART7_TX
PI21/PS2_SDA0/UART7_RX/HSDA/PWM3 R23 UART7_RX
PH0 D23
PH1 F23
PH2 D24
PH3 F22
UART4_TX C23
UART4_RX C24
PH4 B24
PH5 B22
PH6 B23
PH7 A23
E0_RD3 A22
E0_RD2 C21
E0_RD1 D22
E0_RD0 C22
E0_RESET B21
E1_RESET A21
E0_TD3 D21
E0_TD2 D18
E0_TD1 C18
E0_TD0 E19
E0_RXCLK F18
E0_RXER D19
E0_RXDV G17
E0_MDC C19
E0_MDIO B18
E0_TXEN E18
E0_TXCLK A18
E0_CRS B19
E0_COL
PH0/LCD1_D0/UART3_TX/EINT0/CSI1_D0
PH1/LCD1_D1/UART3_RX/EINT1/CSI1_D1
PH2/LCD1_D2/UART3_RTS/EINT2/CSI1_D2
PH3/LCD1_D3/UART3_CTS/EINT3/CSI1_D3
PH4/LCD1_D4/UART4_TX/EINT4/CSI1_D4
PH5/LCD1_D5/UART4_RX/EINT5/CSI1_D5
PH6/LCD1_D6/UART5_TX/MS_BS/EINT6/CSI1_D6
PH7/LCD1_D7/UART5_RX/MS_CLK/EINT7/CSI1_D7
PH8/LCD1_D8/ERXD3/KP_IN0/MS_D0/EINT8/CSI1_D8
PH9/LCD1_D9/ERXD2/KP_IN1/MS_D1/EINT9/CSI1_D9
PH10/LCD1_D10/ERXD1/KP_IN2/MS_D2/EINT10/CSI1_D10
PH11/LCD1_D11/ERXD0/KP_IN3/MS_D3/EINT11/CSI1_D11
PH12/LCD1_D12/PS2_SCK1/EINT12/CSI1_D12
PH13/LCD1_D13/PS2_SDA1/SMC_RST/EINT13/CSI1_D13
PH14/LCD1_D14/ETXD3/KP_IN4/SMC_VPPEN/EINT14/CSI1_D14
PH15/LCD1_D15/ETXD2/KP_IN5/SMC_VPPPP/EINT15/CSI1_D15
PH16/LCD1_D16/ETXD1/KP_IN6/SMC_DET/EINT16/CSI1_D16
PH17/LCD1_D17/ETXD0/KP_IN7/SMC_VCCEN/EINT17/CSI1_D17
PH18/LCD1_D18/ERXCK/KP_OUT0/SMC_SLK/EINT18/CSI1_D18
PH19/LCD1_D19/ERXERR/KP_OUT1/SMC_SDA/EINT19/CSI1_D19
PH20/LCD1_D20/ERXDV/CAN_TX/EINT20/CSI1_D20
PH21/LCD1_D21/EMDC/CAN_RX/EINT21/CSI1_D21
PH22/LCD1_D22/EMDIO/KP_OUT2/SDC1_CMD/CSI1_D22
PH23/LCD1_D23/ETXEN/KP_OUT3/SDC1_CLK/CSI1_D23
PH24/LCD1_CLK/ETXCK/KP_OUT4/SDC1_D0/CSI1_PCLK
PH25/LCD1_DE/ECRS/KP_OUT5/SDC1_D1/CSI1_FIELD
PH26/LCD1_HSYNC/ECOL/KP_OUT6/SDC1_D2/CSI1_HSYNC
PH27/LCD1_VSYNC/ETXERR/KP_OUT7/SDC1_D3/CSI1_VSYNC
DD4
GPIOD
PD0/LCD0_D0/LVDS0_VP0 LVDS0_P0 M2
PD1/LCD0_D1/LVDS0_VN0 LVDS0_N0 M1
PD2/LCD0_D2/LVDS0_VP1 LVDS0_P1 N2
PD3/LCD0_D3/LVDS0_VN1 LVDS0_N1 M3
PD4/LCD0_D4/LVDS0_VP2 LVDS0_P2 P1
PD5/LCD0_D5/LVDS0_VN2 LVDS0_N2 P2
PD6/LCD0_D6/LVDS0_VPC LVDS0_PC R1
PD7/LCD0_D7/LVDS0_VNC LVDS0_NC P3
PD8/LCD0_D8/LVDS0_VP3 LVDS0_P3 R2
PD9/LCD0_D9/LVDS0_VN3 LVDS0_N3 R3
PD10/LCD0_D10/LVDS1_VP0 LVDS1_P0 L5
PD11/LCD0_D11/LVDS1_VN0 LVDS1_N0 L4
PD12/LCD0_D12/LVDS1_VP1 LVDS1_P1 L3
PD13/LCD0_D13/LVDS1_VN1 LVDS1_N1 M4
PD14/LCD0_D14/LVDS1_VP2 LVDS1_P2 N3
PD15/LCD0_D15/LVDS1_VN2 LVDS1_N2 N4
PD16/LCD0_D16/LVDS1_VPC LVDS1_PC P5
PD17/LCD0_D17/LVDS1_VNC LVDS1_NC P4
PD18/LCD0_D18/LVDS1_VP3 LVDS1_P3 R5
PD19/LCD0_D19/LVDS1_VN3 LVDS1_N3 R4
PD20/LCD0_D20/CSI1_MCLK T2
PD21/LCD0_D21/SMC_VPPEN U1
PD22/LCD0_D22/SMC_VPPPP U2
PD23/LCD0_D23/SMC_DET T3
PD24/LCD0_CLK/SMC_VCCEN T4
PD25/LCD0_DE/SMC_RST T5
PD26/LCD0_HSYNC/SMC_SLK U5
PD27/LCD0_VSYNC/SMC_SDA VERSION1 U6
VCC-PD0 VCC_3V3 N7
VCC-PD1 N8
C46 0.1u GND
VERSION1 R35 DNP GND
DD4
HDMI/DSI/SATA/TV
HTX0P HDMI_0P AD5
HTX0N HDMI_0N AC5
HTX1P HDMI_1P AD6
HTX1N HDMI_1N AC6
HTX2P HDMI_2P AD7
HTX2N HDMI_2N AC7
HTXCP HDMI_CKP AD4
HTXCN HDMI_CKN AC4
HSCL HDMI_SCL V9
HSDA HDMI_SDA W9
HCEC HDMI_CEC V10
HHPD HDMI_HPD U11
VCC-HDMI VCC_3V3 U8
SATA-TXP AA9
SATA-TXM AB9
SATA-RXP AA8
SATA-RXM AB8
SATA-CLKP AB7
SATA-CLKM AA7
REXT-SATA W10
VDD-SATA T9 VCC_SYS
VDD25-SATA U9 GPIO0
TVIN0 W2 TVIN0
TVIN1 Y1
TVIN2 Y2
TVIN3 W3
TVOUT0 V1
TVOUT1 V2
TVOUT2 V3
TVOUT3 V4
DSI-CKP DSI_CKP L1
DSI-CKN DSI_CKN L2
DSI-D0P DSI_D0P J1
DSI-D0N DSI_D0N J2
DSI-D1P DSI_D1P K1
DSI-D1N DSI_D1N K2
DSI-D2P DSI_D2P J3
DSI-D2N DSI_D2N J4
DSI-D3P DSI_D3P K3
DSI-D3N DSI_D3N K4
VRP-TVIN T10
VRN-TVIN U10
C96 2.2u
C92 2.2u GND
VCC-TVOUT P8
GND-TVOUT N9
VCC-TVIN P7 ALDO1
GND-TVIN P9 GND
VCC-DSI VCC_3V3 L8
DD4
USB/RTP/KEYADC/AUDIO/SYS
USB0-DM AC8
USB0-DP AD8
USB1-DM AC9
USB1-DP AD9
USB2-DM AA10
USB2-DP AB10
VCC-USB VCC_3V3 T11
C45 0.1u GND
TPX1 ADC1 AA6
TPX2 AB6
TPY1 AB5
TPY2 AB4
KEYADC0 AD3
KEYADC1 AA4
X24MIN AD11
X24MOUT AC11
X32KIN A20
X32KOUT B20
JTAG-SEL K7
VCC-PLL ALDO3 T13
RESET R24
FEL L7
TEST U12
RTC-VIO H16
VCC-RTC VCC_RTC H17
NMI AP-NMI C20
VDD-EFUSE VCC_3V3 M8
VDD-EFUSEBP M7
LINEINL AA3
LINEINR AB2
MICIN1 AB3
MICIN2 AD2
PHONEOUTP V6
PHONEOUTN V5
HPOUTL AA2 HPOUTL
HPOUTR AA1
VRP T8 VRP
VRA2 T7 VRA2
VRA1 R8 VRA1
VMIC AC3 VMIC
FMINL AC1
FMINR AC2
AVCC R7 ALDO3
AGND V7 GND
VCC-HP R9 VCC_3V3
GND-HP V8 GND
HPCOMFB W4
HPCOM Y3
HPBP W8
C99 22p
C98 22p
C63 22p
C65 22p
ZQ3 24M
R37 2.2M
R36 0
ZQ1 32768
R30 10M
R17 4.5k
R39 5.1k
VCC_RTC FEL
C43 10u
C48 2.2u
C44 0.1u
C32 2.2u
C31 10u
J1 FEL GND
C34 10u DNP
C33
C39 10u
R7 200k
C42 2.2u

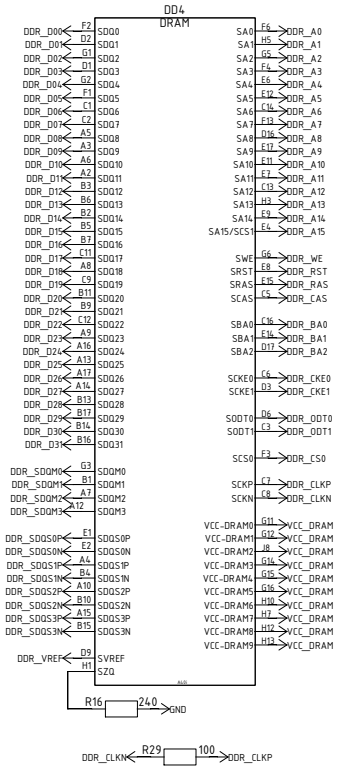
DD4
DRAM
DDR_D00 F2 SDQ0
DDR_D01 D2 SDQ1
DDR_D02 G1 SDQ2
DDR_D03 D1 SDQ3
DDR_D04 G2 SDQ4
DDR_D05 F1 SDQ5
DDR_D06 C1 SDQ6
DDR_D07 C2 SDQ7
DDR_D08 A5 SDQ8
DDR_D09 A3 SDQ9
DDR_D10 A6 SDQ10
DDR_D11 A2 SDQ11
DDR_D12 B3 SDQ12
DDR_D13 B6 SDQ13
DDR_D14 B2 SDQ14
DDR_D15 B5 SDQ15
DDR_D16 B7 SDQ16
DDR_D17 C11 SDQ17
DDR_D18 A8 SDQ18
DDR_D19 C9 SDQ19
DDR_D20 B11 SDQ20
DDR_D21 B9 SDQ21
DDR_D22 C12 SDQ22
DDR_D23 A9 SDQ23
DDR_D24 A16 SDQ24
DDR_D25 A13 SDQ25
DDR_D26 A17 SDQ26
DDR_D27 A14 SDQ27
DDR_D28 B13 SDQ28
DDR_D29 B17 SDQ29
DDR_D30 B14 SDQ30
DDR_D31 B16 SDQ31
DDR_SDQM0 G3 SDQM0
DDR_SDQM1 B1 SDQM1
DDR_SDQM2 A7 SDQM2
DDR_SDQM3 A12 SDQM3
DDR_SDQS0P E1 SDQS0P
DDR_SDQS0N E2 SDQS0N
DDR_SDQS1P A4 SDQS1P
DDR_SDQS1N B4 SDQS1N
DDR_SDQS2P A10 SDQS2P
DDR_SDQS2N B10 SDQS2N
DDR_SDQS3P A15 SDQS3P
DDR_SDQS3N B15 SDQS3N
DDR_VREF D9 SVREF
H1 SZQ
SA0 F6 DDR_A0
SA1 H5 DDR_A1
SA2 G5 DDR_A2
SA3 F4 DDR_A3
SA4 E6 DDR_A4
SA5 E12 DDR_A5
SA6 C16 DDR_A6
SA7 F13 DDR_A7
SA8 D16 DDR_A8
SA9 E17 DDR_A9
SA10 E11 DDR_A10
SA11 E7 DDR_A11
SA12 C13 DDR_A12
SA13 H3 DDR_A13
SA14 E9 DDR_A14
SA15/SCS1 E4 DDR_A15
SWE G6 DDR_WE
SRST E8 DDR_RST
SRAS E15 DDR_RAS
SCAS C5 DDR_CAS
SBA0 C16 DDR_BA0
SBA1 E14 DDR_BA1
SBA2 D17 DDR_BA2
SCKE0 C6 DDR_CKE0
SCKE1 D3 DDR_CKE1
SODT0 D6 DDR_ODT0
SODT1 C3 DDR_ODT1
SCS0 F3 DDR_CS0
SCKP C7 DDR_CLKP
SCKN C8 DDR_CLKN
VCC-DRAM0 G11 VCC_DRAM
VCC-DRAM1 G12 VCC_DRAM
VCC-DRAM2 J8 VCC_DRAM
VCC-DRAM3 G14 VCC_DRAM
VCC-DRAM4 G15 VCC_DRAM
VCC-DRAM5 G16 VCC_DRAM
VCC-DRAM6 H14 VCC_DRAM
VCC-DRAM7 H7 VCC_DRAM
VCC-DRAM8 H12 VCC_DRAM
VCC-DRAM9 H13 VCC_DRAM
R16 240 GND
DDR_CLKN R29 100 DDR_CLKP

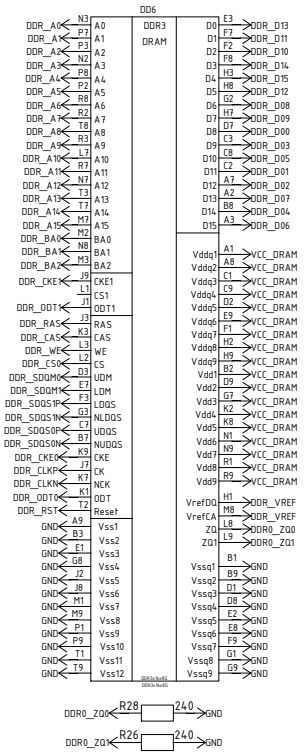
DD6
DDR3
DRAM
DDR_A0 N3 A0
DDR_A1 P7 A1
DDR_A2 P3 A2
DDR_A3 N2 A3
DDR_A4 P8 A4
DDR_A5 P2 A5
DDR_A6 R8 A6
DDR_A7 R2 A7
DDR_A8 T8 A8
DDR_A9 R3 A9
DDR_A10 L7 A10
DDR_A11 R7 A11
DDR_A12 N7 A12
DDR_A13 T3 A13
DDR_A14 T7 A14
DDR_A15 M7 A15
DDR_BA0 M2 BA0
DDR_BA1 N8 BA1
DDR_BA2 M3 BA2
DDR_CKE1 J9 CKE1
DDR_ODT1 L1 CS1
J1 ODT1
DDR_RAS J3 RAS
DDR_CAS K3 CAS
DDR_WE L3 WE
DDR_CS0 L2 CS
DDR_SDQM0 D3 UDM
DDR_SDQM1 E7 LDM
DDR_SDQS1P F3 LDQS
DDR_SDQS1N G3 NLDQS
DDR_SDQS0P C7 UDQS
DDR_SDQS0N B7 NUDQS
DDR_CKE0 K9 CKE
DDR_CLKP J7 CK
DDR_CLKN K7 NCK
DDR_ODT0 K1 ODT
DDR_RST T2 Reset
GND A9 Vss1
GND B3 Vss2
GND E1 Vss3
GND G8 Vss4
GND J2 Vss5
GND J8 Vss6
GND M1 Vss7
GND M9 Vss8
GND P1 Vss9
GND P9 Vss10
GND T1 Vss11
GND T9 Vss12
D0 E3 DDR_D13
D1 F7 DDR_D11
D2 F2 DDR_D10
D3 F8 DDR_D14
D4 H3 DDR_D15
D5 H8 DDR_D12
D6 G2 DDR_D08
D7 H7 DDR_D09
D8 D7 DDR_D00
D9 C3 DDR_D03
D10 C8 DDR_D05
D11 C2 DDR_D01
D12 A7 DDR_D02
D13 A2 DDR_D07
D14 B8 DDR_D04
D15 A3 DDR_D06
Vddq1 A1 VCC_DRAM
Vddq2 A8 VCC_DRAM
Vddq3 C1 VCC_DRAM
Vddq4 C9 VCC_DRAM
Vddq5 D2 VCC_DRAM
Vddq6 E9 VCC_DRAM
Vddq7 F1 VCC_DRAM
Vddq8 H2 VCC_DRAM
Vddq9 H9 VCC_DRAM
Vdd1 B2 VCC_DRAM
Vdd2 D9 VCC_DRAM
Vdd3 G7 VCC_DRAM
Vdd4 K2 VCC_DRAM
Vdd5 K8 VCC_DRAM
Vdd6 N1 VCC_DRAM
Vdd7 N9 VCC_DRAM
Vdd8 R1 VCC_DRAM
Vdd9 R9 VCC_DRAM
VrefDQ H1 DDR_VREF
VrefCA M8 DDR_VREF
ZQ L8 DDR0_ZQ0
ZQ1 L9 DDR0_ZQ1
B1
Vssq1 B9 GND
Vssq2 D1 GND
Vssq3 D8 GND
Vssq4 E2 GND
Vssq5 E8 GND
Vssq6 F9 GND
Vssq7 G1 GND
Vssq8 G9 GND
Vssq9
DDR0_ZQ0 R28 240 GND
DDR0_ZQ1 R26 240 GND

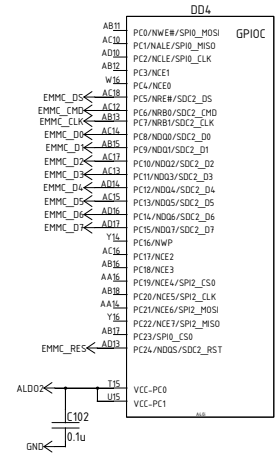
DD4
GPIOC
AB11 PC0/NWE#/SPI0_MOSI
AC10 PC1/NALE/SPI0_MISO
AD10 PC2/NCLE/SPI0_CLK
AB12 PC3/NCE1
W16 PC4/NCE0
EMMC_DS AC18 PC5/NRE#/SDC2_DS
EMMC_CMD AC12 PC6/NRB0/SDC2_CMD
EMMC_CLK AB13 PC7/NRB1/SDC2_CLK
EMMC_D0 AC14 PC8/NDQ0/SDC2_D0
EMMC_D1 AB15 PC9/NDQ1/SDC2_D1
EMMC_D2 AC17 PC10/NDQ2/SDC2_D2
EMMC_D3 AC13 PC11/NDQ3/SDC2_D3
EMMC_D4 AD14 PC12/NDQ4/SDC2_D4
EMMC_D5 AC15 PC13/NDQ5/SDC2_D5
EMMC_D6 AD16 PC14/NDQ6/SDC2_D6
EMMC_D7 AD17 PC15/NDQ7/SDC2_D7
Y16 PC16/NWP
AC16 PC17/NCE2
AB16 PC18/NCE3
AA16 PC19/NCE4/SPI2_CS0
AB18 PC20/NCE5/SPI2_CLK
AA15 PC21/NCE6/SPI2_MOSI
Y15 PC22/NCE7/SPI2_MISO
AB17 PC23/SPI0_CS0
EMMC_RES AD13 PC24/NDQS/SDC2_RST
ALDO2 T15 VCC-PC0
U15 VCC-PC1
C102 0.1u
GND

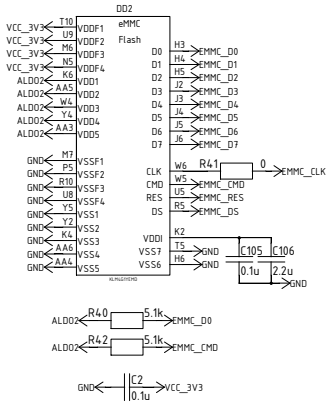
DD2
eMMC
Flash
VCC_3V3 T10 VDDF1
VCC_3V3 U9 VDDF2
VCC_3V3 M6 VDDF3
VCC_3V3 N5 VDDF4
ALDO2 K6 VDD1
ALDO2 AA5 VDD2
ALDO2 W4 VDD3
ALDO2 Y4 VDD4
ALDO2 AA3 VDD5
GND M7 VSSF1
GND P5 VSSF2
GND R10 VSSF3
GND U8 VSSF4
GND Y5 VSS1
GND Y2 VSS2
GND K4 VSS3
GND AA6 VSS4
GND AA4 VSS5
D0 H3 EMMC_D0
D1 H4 EMMC_D1
D2 H5 EMMC_D2
D3 J2 EMMC_D3
D4 J3 EMMC_D4
D5 J4 EMMC_D5
D6 J5 EMMC_D6
D7 J6 EMMC_D7
CLK W6 R41 0 EMMC_CLK
CMD W5 EMMC_CMD
RES U5 EMMC_RES
DS R5 EMMC_DS
VDDI K2
VSS7 T5 GND
VSS6 H6 GND
C105 0.1u
C106 2.2u
GND
ALDO2 R40 5.1k EMMC_D0
ALDO2 R42 5.1k EMMC_CMD
GND C2 0.1u VCC_3V3

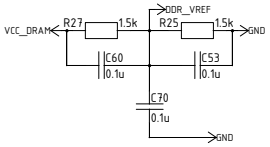
DDR_VREF
VCC_DRAM R27 1.5k
R25 1.5k GND
C60 0.1u
C53 0.1u
C70 0.1u
GND

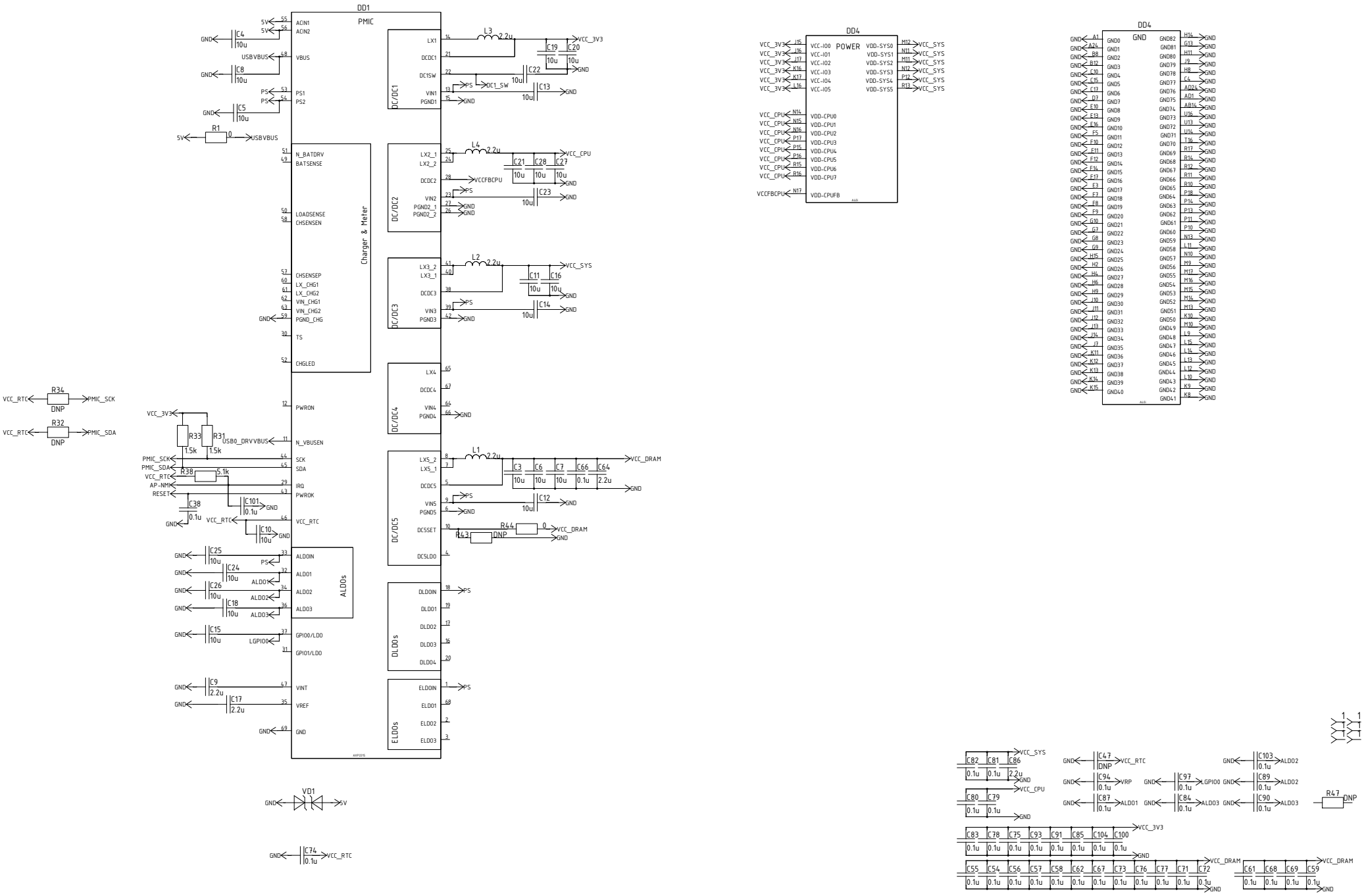
DD1
PMIC
ACIN1
ACIN2
VBUS
PS1
PS2
N_BATDRV
BATSENSE
LOADSENSE
CHSENSEN
CHSENSEP
LX_CHG1
LX_CHG2
VIN_CHG1
VIN_CHG2
PGND_CHG
TS
CHGLED
Charger & Meter
PWRON
N_VBUSEN
SCK
SDA
IRQ
PWROK
VCC_RTC
ALDOIN
ALDO1
ALDO2
ALDO3
ALDOs
GPIO0/LDO
GPIO1/LDO
VINT
VREF
GND
DC/DC1
LX1
DCDC1
DC1SW
VIN1
PGND1
DC/DC2
LX2_1
LX2_2
DCDC2
VIN2
PGND2_1
PGND2_2
DC/DC3
LX3_2
LX3_1
DCDC3
VIN3
PGND3
DC/DC4
LX4
DCDC4
VIN4
PGND4
DC/DC5
LXS_2
LXS_1
DCDC5
VINS
PGNDS
DCSSET
DCSLDO
DLDOs
DLDOIN
DLDO1
DLDO2
DLDO3
DLDO4
ELDOs
ELDOIN
ELDO1
ELDO2
ELDO3
L3 2.2u
L4 2.2u
L2 2.2u
L1 2.2u
VCC_3V3
VCC_CPU
VCC_SYS
VCC_DRAM
VCCFBCPU
DC1_SW
USBVBUS
USB0_DRVVBUS
PMIC_SCK
PMIC_SDA
R1 0
R33 1.5k
R31 1.5k
R38 5.1k
R34 DNP
R32 DNP
R44 0
R43 DNP
C38 0.1u
C101 0.1u
C10 10u
C4 10u
C8 10u
C5 10u
C19 10u
C20 10u
C22 10u
C13 10u
C21 10u
C28 10u
C27 10u
C23 10u
C11 10u
C16 10u
C14 10u
C3 10u
C6 10u
C7 10u
C66 0.1u
C64 2.2u
C12 10u
C25 10u
C24 10u
C26 10u
C18 10u
C15 10u
C9 2.2u
C17 2.2u
VD1
C74 0.1u
DD4
POWER
VCC-IO0
VCC-IO1
VCC-IO2
VCC-IO3
VCC-IO4
VCC-IO5
VDD-CPU0
VDD-CPU1
VDD-CPU2
VDD-CPU3
VDD-CPU4
VDD-CPU5
VDD-CPU6
VDD-CPU7
VDD-CPUFB
VDD-SYS0
VDD-SYS1
VDD-SYS2
VDD-SYS3
VDD-SYS4
VDD-SYS5
DD4
GND
C82 0.1u
C81 0.1u
C86 2.2u
C80 0.1u
C79 0.1u
C47 DNP
C94 0.1u
C87 0.1u
C97 0.1u
C84 0.1u
C103 0.1u
C89 0.1u
C90 0.1u
R47 DNP
C83 0.1u
C78 0.1u
C75 0.1u
C93 0.1u
C91 0.1u
C85 0.1u
C104 0.1u
C100 0.1u
C55 0.1u
C54 0.1u
C56 0.1u
C57 0.1u
C58 0.1u
C62 0.1u
C67 0.1u
C73 0.1u
C76 0.1u
C77 0.1u
C71 0.1u
C72 0.1u
C61 0.1u
C68 0.1u
C69 0.1u
C59 0.1u