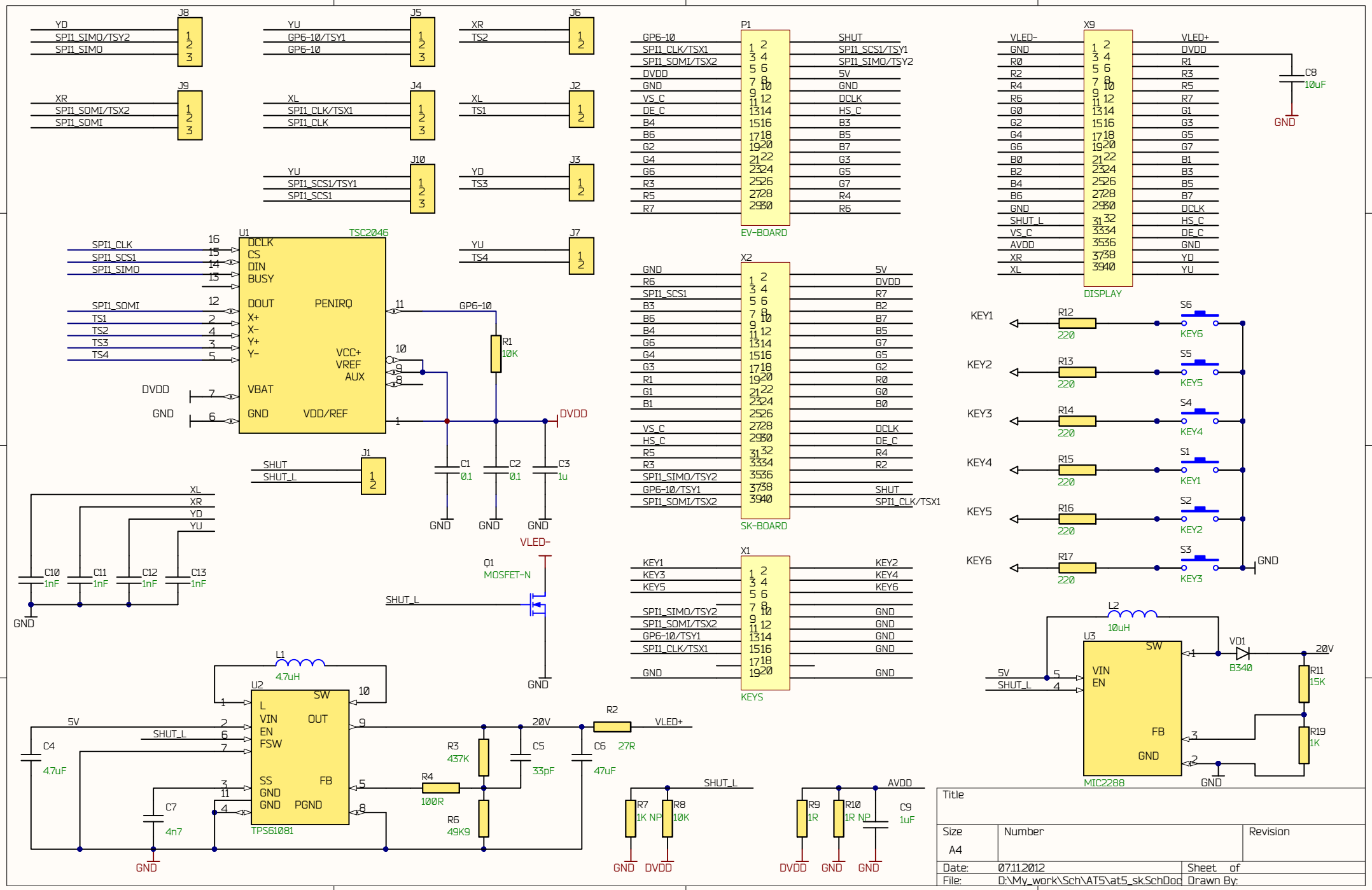
J8
YD
SPI1_SIMO/TSY2
SPI1_SIMO
J5
YU
GP6-10/TSY1
GP6-10
J6
XR
TS2
J9
XR
SPI1_SOMI/TSX2
SPI1_SOMI
J4
XL
SPI1_CLK/TSX1
SPI1_CLK
J2
XL
TS1
J10
YU
SPI1_SCS1/TSY1
SPI1_SCS1
J3
YD
TS3
J7
YU
TS4
U1
TSC2046
DCLK
CS
DIN
BUSY
DOUT
PENIRQ
X+
X-
Y+
Y-
VCC+
VREF
AUX
VBAT
GND
VDD/REF
SPI1_CLK
SPI1_SCS1
SPI1_SIMO
SPI1_SOMI
TS1
TS2
TS3
TS4
DVDD
GND
GP6-10
R1
10K
DVDD
J1
SHUT
SHUT_L
C1
0.1
C2
0.1
C3
1u
GND
VLED-
Q1
MOSFET-N
SHUT_L
XL
XR
YD
YU
C10
1nF
C11
1nF
C12
1nF
C13
1nF
L1
4.7uH
U2
L
VIN
EN
FSW
SS
GND
GND
SW
OUT
FB
PGND
TPS61081
5V
SHUT_L
C4
4.7uF
C7
4n7
20V
R2
VLED+
R3
437K
R4
100R
R6
49K9
C5
33pF
C6
47uF
R7
1K NP
R8
10K
SHUT_L
R9
1R
R10
1R NP
C9
1uF
AVDD
P1
EV-BOARD
GP6-10
SPI1_CLK/TSX1
SPI1_SOMI/TSX2
DVDD
GND
VS_C
DE_C
B4
B6
G2
G4
G6
R3
R5
R7
SHUT
SPI1_SCS1/TSY1
SPI1_SIMO/TSY2
5V
GND
DCLK
HS_C
B3
B5
B7
G3
G5
G7
R4
R6
X2
SK-BOARD
GND
R6
SPI1_SCS1
B3
B6
B4
G6
G4
G3
R1
G1
B1
VS_C
HS_C
R5
R3
SPI1_SIMO/TSY2
GP6-10/TSY1
SPI1_SOMI/TSX2
5V
DVDD
R7
B2
B7
B5
G7
G5
G2
R0
G0
B0
DCLK
DE_C
R4
R2
SHUT
SPI1_CLK/TSX1
X1
KEYS
KEY1
KEY3
KEY5
SPI1_SIMO/TSY2
SPI1_SOMI/TSX2
GP6-10/TSY1
SPI1_CLK/TSX1
GND
KEY2
KEY4
KEY6
GND
GND
GND
GND
GND
X9
DISPLAY
VLED-
GND
R0
R2
R4
R6
G0
G2
G4
G6
B0
B2
B4
B6
GND
SHUT_L
VS_C
AVDD
XR
XL
VLED+
DVDD
R1
R3
R5
R7
G1
G3
G5
G7
B1
B3
B5
B7
DCLK
HS_C
DE_C
GND
YD
YU
C8
10uF
GND
KEY1
KEY2
KEY3
KEY4
KEY5
KEY6
R12
220
R13
220
R14
220
R15
220
R16
220
R17
220
S6
KEY6
S5
KEY5
S4
KEY4
S1
KEY1
S2
KEY2
S3
KEY3
GND
L2
10uH
U3
MIC2288
SW
VIN
EN
FB
GND
5V
SHUT_L
VD1
B340
20V
R11
15K
R19
1K
GND
Title
Size
A4
Number
Revision
Date: 07.11.2012
Sheet of
File: D:\My_work\Sch\AT5\at5_sk.SchDoc
Drawn By:

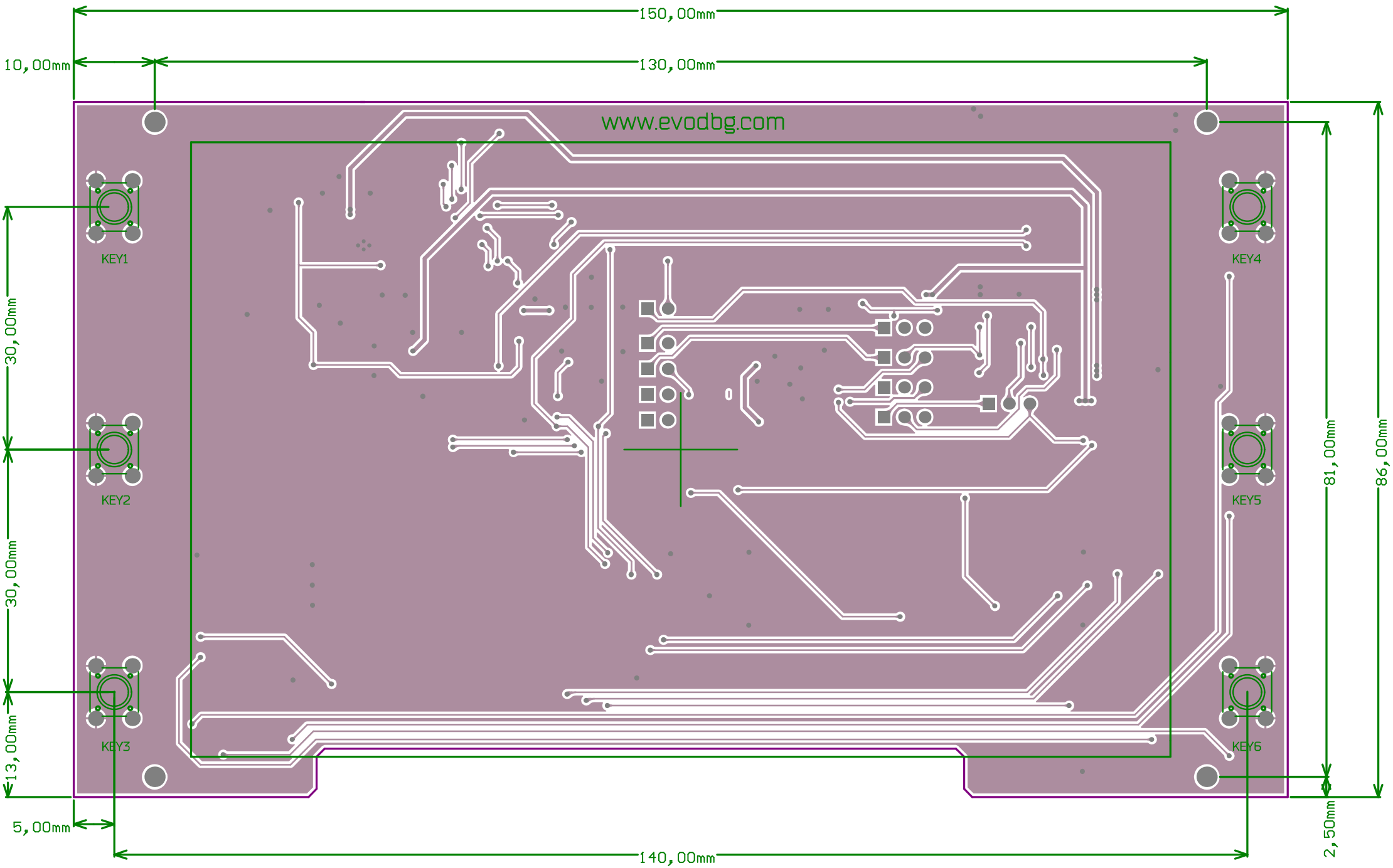
150,00mm
10,00mm
130,00mm
www.evodbg.com
KEY1
KEY2
KEY3
KEY4
KEY5
KEY6
30,00mm
30,00mm
13,00mm
5,00mm
140,00mm
81,00mm
86,00mm
2,50mm